Using Infrared to Detect the Invisible

Uncovering equipment & process problems effectively with Infrared Thermometers

Both preventive and predictive maintenance programs rely on regular inspections of the critical assets that comprise a plant or facility. These inspections range from visual inspections to non-destructive testing performed using a variety of instrumentation. While the methods vary, all inspections require plant personnel to periodically visit each of the systems, machines and/or equipment within the plant to anticipate the need for preventive and/or corrective maintenance.

Many maintenance engineers consider infrared non-contact thermometers not only indispensable for such inspections, but possibly the most important tools in their everyday work. By scanning surfaces with these temperature inspection tools, you can quickly locate hot and cold spots, which could be indications of underlying problems, and focus your maintenance efforts on exactly what needs repairing. Defective components are often classified according to the severity of the problem, which takes into account the absolute temperature of the component, the difference in temperature from the component to its environment, and/or the difference to other components in similar load situations. Handheld infrared thermometers provide a quick, safe and accurate way to collect this data. By comparing the results of inspections over time, changes in the temperature of objects can be detected and analysed to determine if failure is likely.

Most mechanical systems generate some thermal energy during normal operation and temperature monitoring can evaluate their operating condition. One of the biggest problems in mechanical systems is excessive temperature. This excessive heat can be generated by friction, lubrication degradation, material or coolant loss or blockages. Regular temperature monitoring of machinery components enhances your ability to predict failure and plan corrective action before a costly shutdown, equipment damage, or personal injury occurs. Temperature checks should be performed regularly to locate hot spots or heat imbalances on, for example, drives and motors, bearings and transmissions, as well as hydraulic components, pumps, pulleys, and conveyors. Electrical equipment measurements have similar demands. Bus bars with loose or oxidised joints, for example, will rapidly exhibit higher than normal temperatures due to electrical resistance.

However, simply finding the heat does not necessarily mean that a problem is present. To properly evaluate the presence of hot spots, you need to know the operating load and acceptable heat ranges for those loads, which are specified by manufacturers of various equipment. In this case, you must be able to measure exact spot temperature values. Even a small temperature difference of 5 to 10 degrees can mean a major problem. Normal inspection methods alone cannot always indicate such slight temperature variations. This is where Infrared inspection enters the picture – knowing the precise temperature is in some cases an absolute decision-making requirement.
With tools, such as handheld infrared thermometers, you can quickly and accurately measure small variations in surface temperature, taking into account all the variables of proper temperature measurement, such as emissivity and reflected temperature. When using infrared thermometers you can make sound decisions about scheduling corrective maintenance activities and following up on repairs in the plant.

The Raytek range of handheld infrared thermometers provide more than a temperature reading on a display, they include many features to support maintenance inspections. These include data logging, or the ability to capture and store temperature data from multiple locations along an inspection route, flexible display options such as maximum, minimum, average and differential temperature, audible HI and LOW alarms to indicate temperatures above and below acceptable ranges and Windows-based software for temperature trend analysis and report preparation on a PC. For enhanced documentation, the PhotoTemp is a photographic IR thermometer with a built-in digital camera. This variation allows

you to take snapshots of temperature measurements, showing the measurement spot marked by a laser, with temperature, time and date information. The detailed images can be easily downloaded from the unit, and then included in inspection reports to document findings.

For more information on the Raytek and Ircon range of Fixed and Portable Infrared devices, please contact:

R&C INSTRUMENTATION
086 111 4217
E-mail……. info@randci.co.za
VISIT OUR WEB SITE.... www.randci.co.za

Infrared Temperature Measurement In Plastic Extrusion Processes

Consistent product temperature profiles are critical in continuous web applications such as plastics extrusions or extrusion coating. Typically, process temperatures are adjusted in open-loop fashion without real-time product temperature feedback. But, non-contact infrared linescanners can provide edge-to-edge temperature measurement feedback on extrusion processes.
The Thermalert® EC100 system from **Raytek** is an automated surface inspection system for detecting, measuring and classifying defects on products made in extrusion processes. With the continuous production control and the early detection of extrusion defects (waving or running edges, gaps) the customer can improve the manufacturing process and avoid scrap to achieve a zero defect standard of quality.
To monitor the plastic-coated product's temperature and ensure precise temperature control, an infrared linescanner is positioned immediately after the extruder, prior to the chill rolls. Proper web temperature at this location is critical for strong plastics-to-paper-substrate adhesion. Cross-web temperature variation, a key determinant of coating thickness uniformity, also is controlled by the linescanner at the extruder's die zone heaters. Maintaining a consistent temperature profile improves the product's finished appearance, dimensional stability and folding endurance. Graphical software generates real-time process images for enhanced monitoring and control during start up and operation, allowing processors to increase productivity and improve product quality.

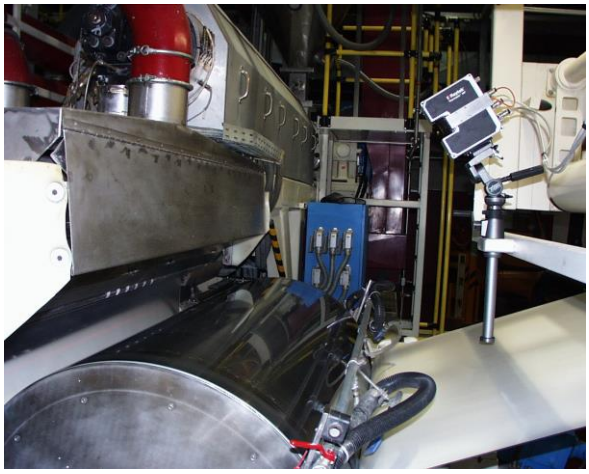

The demand for vendors to follow ISO 9000 certification procedures is increasingly important also in the plastics and packaging industries. ISO 9000 requires an organisation to establish, document, and maintain a quality system to ensure that its product conforms to specified requirements. This quality system is intended to complement the technical requirements of the product. Many companies are writing standards for documenting and monitoring temperature for inclusion in their ISO 9000 process control issues and these include procedures accepting materials into a process, statistical process control, and proper maintenance of process equipment. Temperature measurement and documentation is frequently critical to these issues.

The Thermalert® EC100 system includes the Raytek Thermalert MP40 infrared linescanner with laser sighting and mounting accessories, the Windows NT software program DataTemp EC100, an interface converter and an alarm/trigger box, see figure 1.

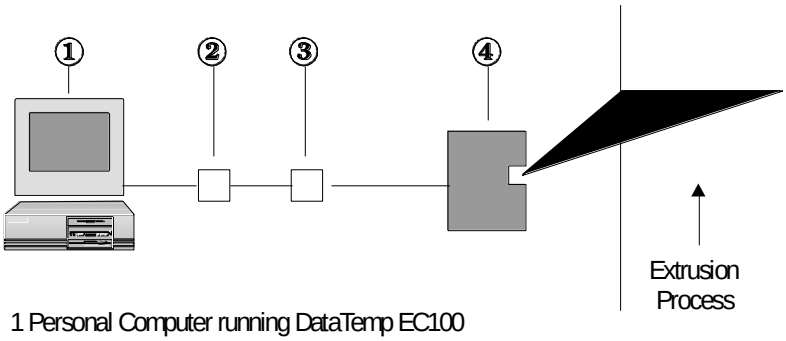

1 Personal Computer running DataTemp EC100
2 Alarm/Trigger Box
3 RS232/RS485 - Converter
4 Infrared Linescanner

Figure 1: Components of the EC100 System